REVISIONS				
REV	DATE	ECN	DESCRIPTION OF CHANGE	BY
A	11/14/13	..	Original Issue	EJC
B	06/12/14		Added LED Car Light Ckt	EJC
C	12/18/14		Added 4 LED Car Light Ckt	EJC
D	04/27/17		INTERCHANGED TEXT FOR J15 & J17	EJC

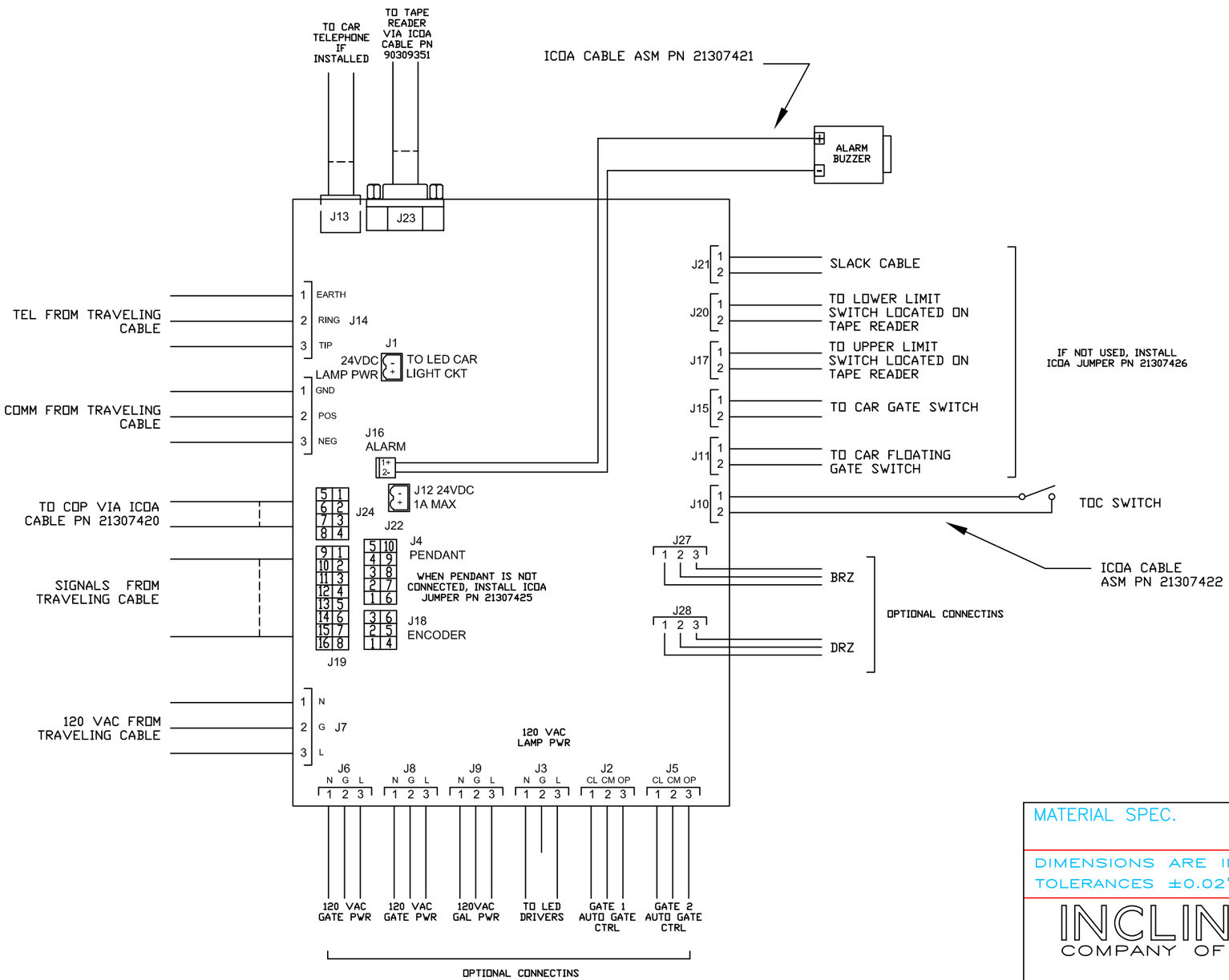

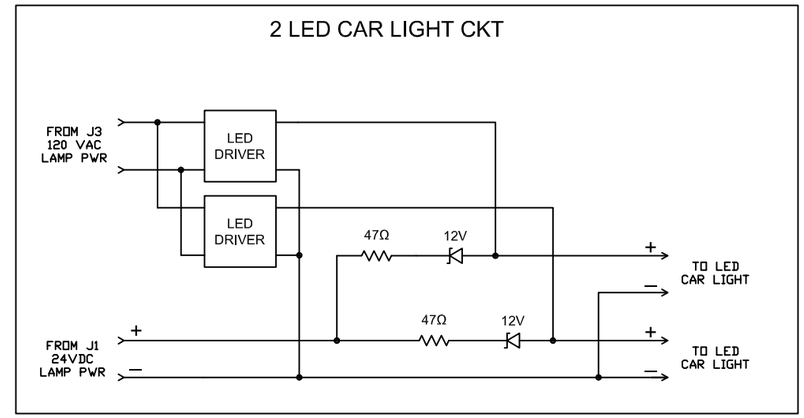

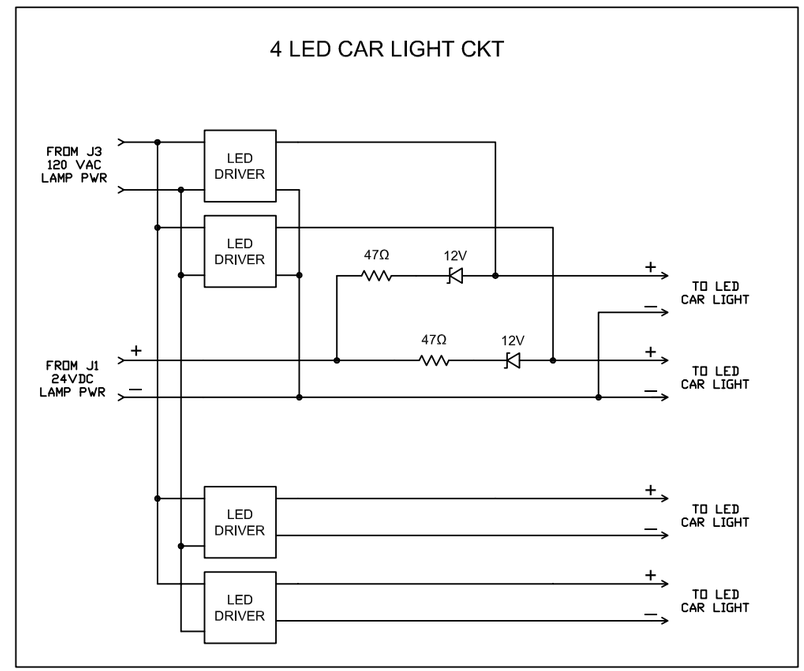

MATERIAL SPEC.	PART NUMBER 80209363					
DIMENSIONS ARE IN INCHES, FRACTIONAL TOLERANCES ±1/32", DECIMAL TOLERANCES ±0.02", ANGULAR TOLERANCES ±1°, UNLESS OTHERWISE NOTED.						DWG. DATE 11/14/13
INCLINATOR COMPANY OF AMERICA HARRISBURG, PA	DRAWING TITLE UNIVERSAL CONTROL, UC601 TOP OF CAR (TOC) ENCLOSURE SCHEMATIC DIAGRAM					DRAWING NO. 80209363
DRAWN EJC	CHECKED	DESIGNED EJC	APPROVED	INITIAL ECN	DWG. SCALE NONE	REV. LEVEL D